REV	DESCRIPTION OF REVISION	E.C.N.	BY	APPROVED	DATE
A	GRD. .018±.008 PH & .068±.005 PH	00151	E.T.W.	D.B.	10-07-08

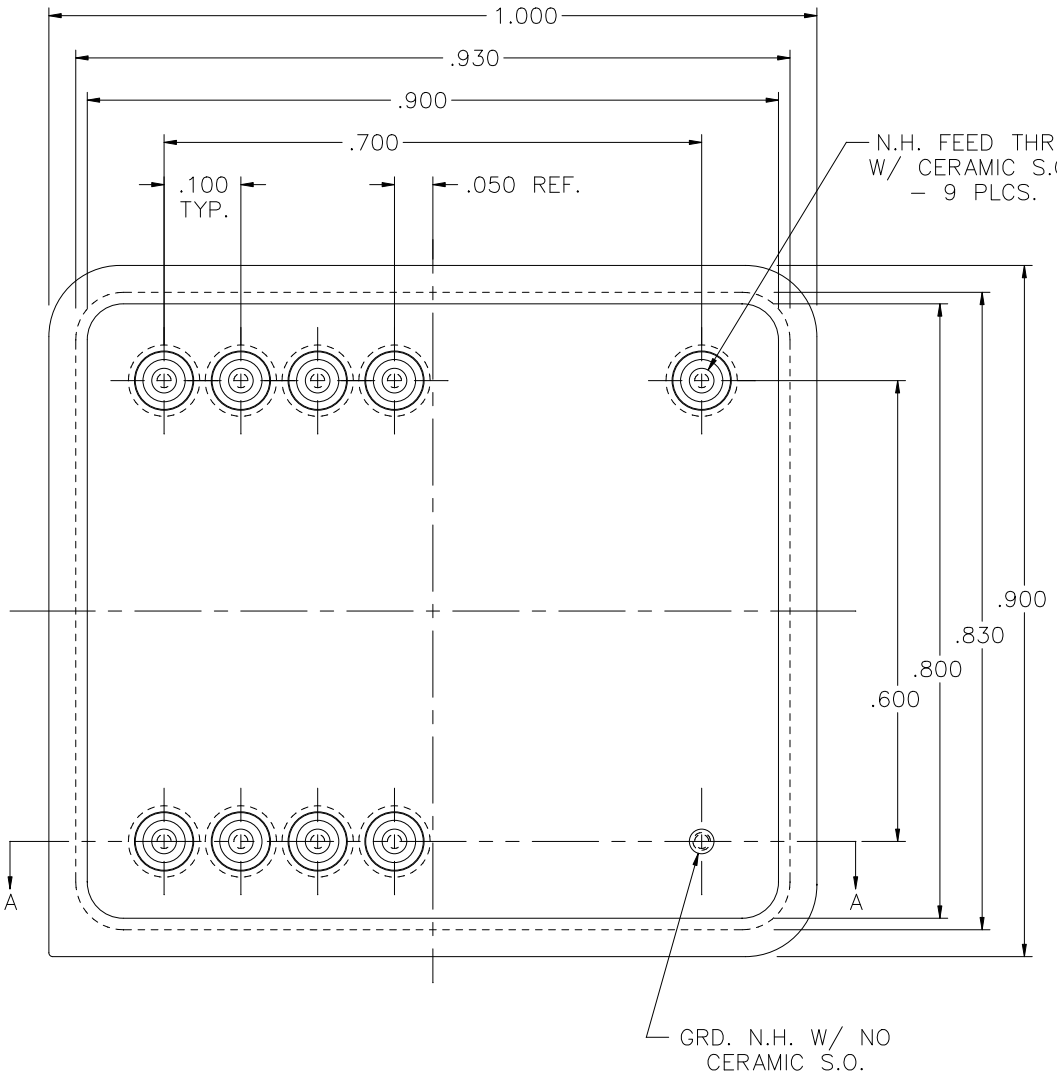

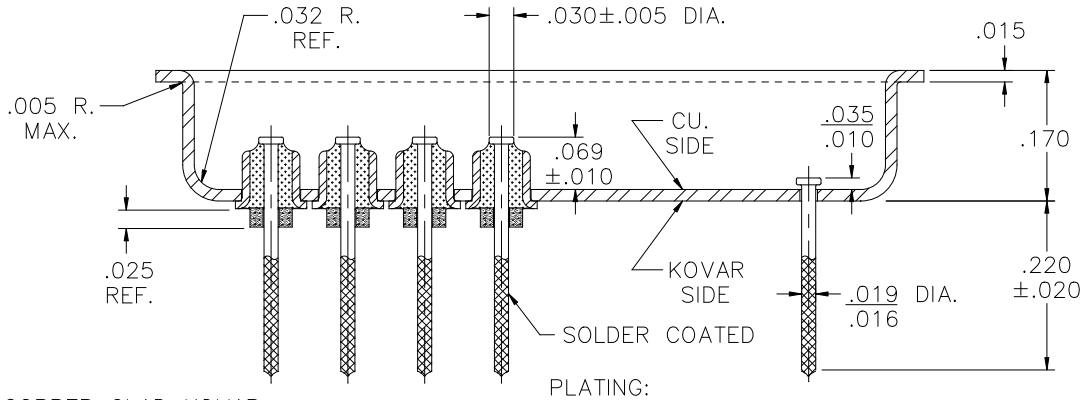

MATERIAL:

PLATFORM – 30/70 COPPER CLAD KOVAR.
EYELET – ASTM F-15 ALLOY, KOVAR.
GLASS – 7052 OR EQUAL.
LEADS – ASTM F-15 ALLOY, KOVAR.
BRAZE – BRAZE.
STANDOFF – CERAMIC.

PLATING:

1. RoHS COMPLIANT ELECTROLESS NICKEL PLATE OF 100 MICROINCHES MINIMUM FOLLOWED BY A RoHS COMPLIANT LEAD FREE SOLDER COAT, ON POSTS AND LEADS.

DRAWN BY: E.T.W. 01-24-08	MATERIAL: SEE ABOVE			TOLERANCING PER ANSI Y14.5 .X ±.005 .XXX ±.005 .XX ±.005 ANG ±5° UNLESS OTHERWISE SPECIFIED
CHECKED BY:	APP. SPECS	SUPERSEDES	NEXT ASSY	SCALE: 4:1 / FINISH: UNLESS OTHERWISE SPECIFIED
APPROVED BY:	TITLE: COLD WELD DOUBLE WIDE D.I.P.			

Legacy Technologies Inc.
6700 W. 47th TERR.
MISSION, KS. 66203
TEL: 913-432-2487
FAX: 913-432-0570

PART NUMBER: CW-900-1000-A RoHS LT — A

FILE: MN00001A — PAGE 1 OF 1